New Wave
NEW WAVE SPORTSWEAR BV

MEASUREMENT SHEET/SIZE SPEC				
Style nr. / name: 021021 BASIC HOODY JUNIOR	**Size ranges:** 90/100 - 150/160	**Last update:** 09-07-2014	**Base pattern:**	**Remarks:**
Client: Basic	**Except Color:**	**By:** GP **Eng:**	**Season:** WINTER 2014	HOODY JUNIOR NW PRODUCTION

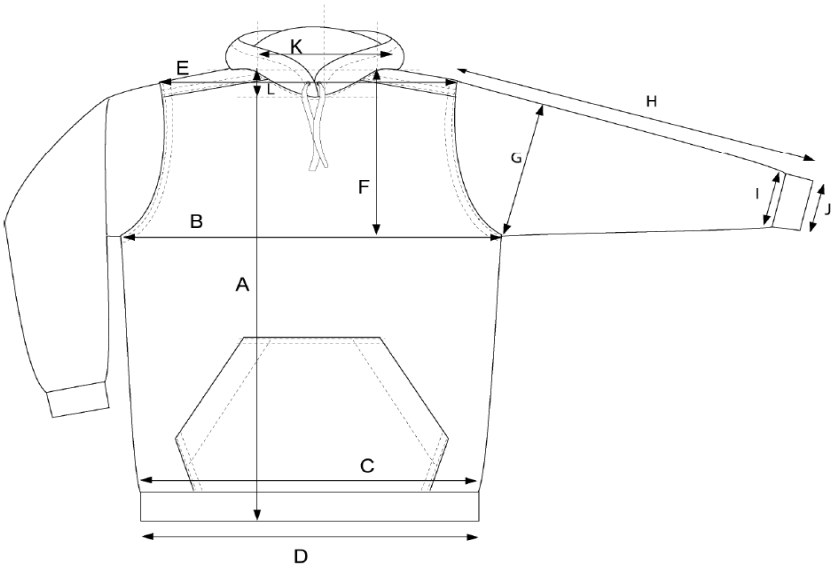

	3/5y 90/100	6/8y 110/120	9/11y 130/140	12/14y 150/160		Tolerance
A - Bodylength	45	50	55	60		
B - 1/2 Chest	34	38	42	46		
H - Sleevelength	41	47	53	59		

REMARKS: