New Wave
NEW WAVE SPORTSWEAR BV

MEASUREMENT SHEET/SIZE SPEC				
Style nr. / name: 028243 SEATTLE LADIES	**Size ranges:** S/36 - XL/42	**Last update:** 14-Jan-2015	**Base pattern:**	**Remarks:**
Client: Clique	**Except Color:**	**By:** GP **Eng:**	**Season:** SUMMER 2015	POLO WOMEN NW PRODUCTION

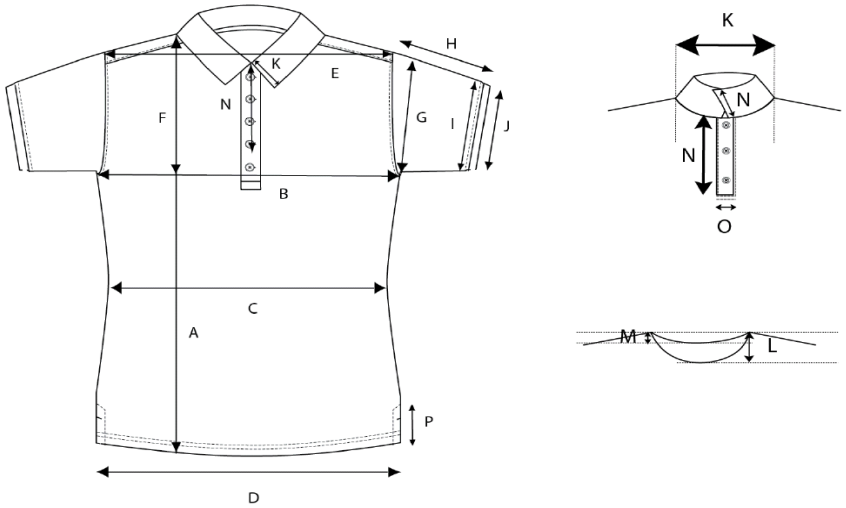

			S/36	M/38	L/40	XL/42	XXL/44				Tolerance
A - Bodylength from HPS			63	65	67	70	73				
B - 1/2 Chest			45	48	52	57	62				
H - Sleeve length			16	17	18	19	20				

REMARKS:

Grijs: maat XXL wordt niet aangeboden in catalogus, wordt wel vermeldt in maattabel Zweden