1AE/AL30

20110506

E

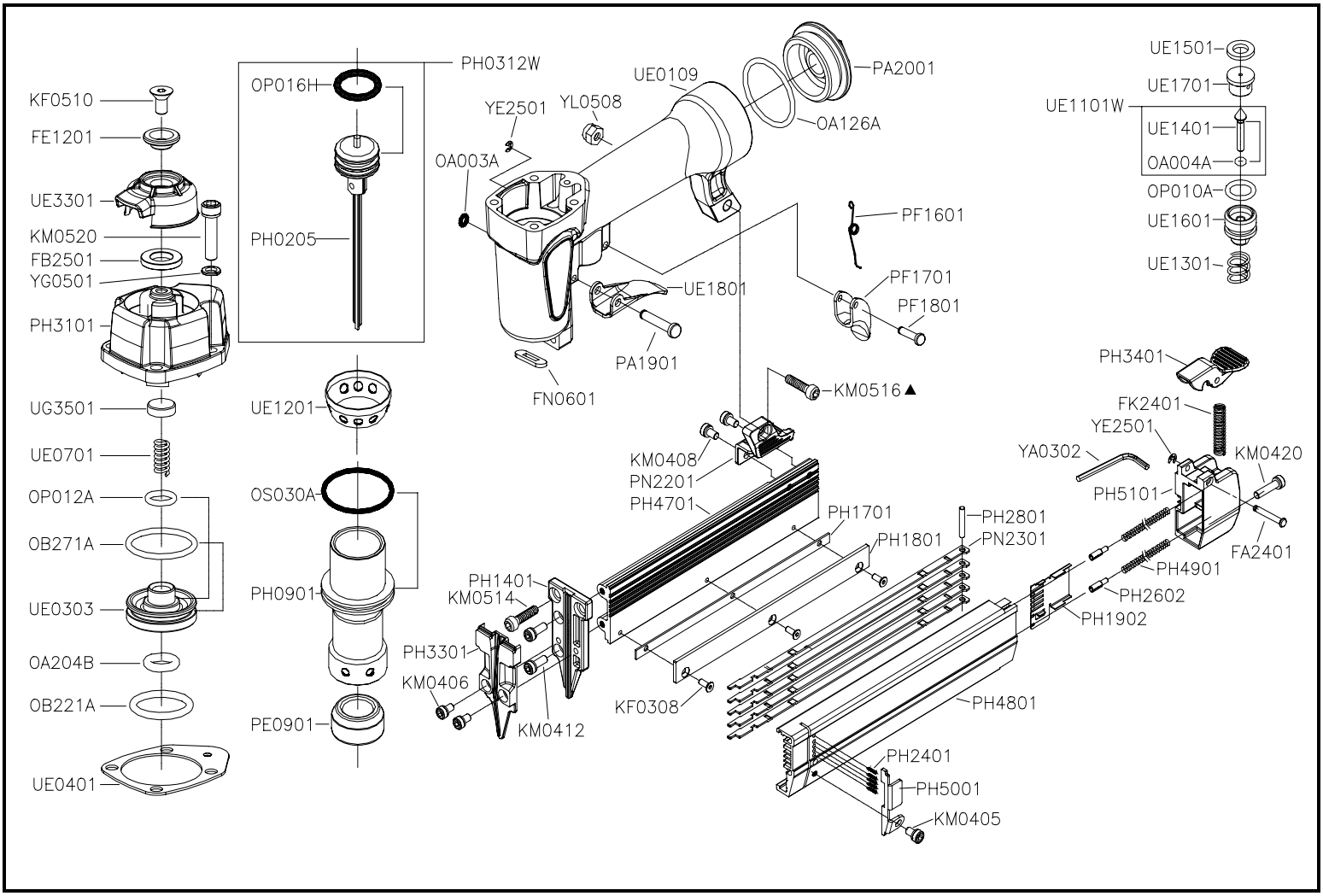

Part_No	Description	Spec	Q'ty	Part_No	Description	Spec	Q'ty	Part_No	Description	Spec	Q'ty
FA2401	PIN		1	PA2001	END CAP		1	UE0303	HEAD VALVE PISTON		1
FB2501	PISTON STOP		1	PE0901	BUMPER		1	UE0401	CAP SEAL		1
FE1201	EXHAUST CAP RING		1	PF1601	SPRING		1	UE0701	COMPRESSION SPRING		1
FK2401	COMPRESSION SPRING		1	PF1701	SAFETY LEVER		1	UE1101W	TRIGGER VALVE ASSY.		1
FN0601	NOZZLE		1	PF1801	PIN		1	UE1201	COLLAR		1
KF0308	FLAT HD.BOLT	M3×0.5－8L	3	PH0205	DRIVER SET		1	UE1301	COMPRESSION SPRING		1
KF0510	FLAT HD.BOLT	M5×0.8－10L	1	PH0312W	DRIVER ASSY.		1	UE1401	TRIGGER VALVE STEM		1
KM0405	HEX.SOC.HD.BOLT	M4×0.7－5L	1	PH0901	CYLINDER		1	UE1501	SEAL		1
KM0406	HEX.SOC.HD.BOLT	M4×0.7－6L	2	PH1401	GUIDE PLATE		1	UE1601	TRIGGER VALVE GUIDE		1
KM0408	HEX.SOC.HD.BOLT	M4×0.7－8L	2	PH1701	SPACER		1	UE1701	TRIGGER VALVE SEAT		1
KM0412	HEX.SOC.HD.BOLT	M4×0.7－12L	2	PH1801	DISTANCE SET		1	UE1801	TRIGGER		1
KM0420	HEX.SOC.HD.BOLT	M4×0.7－20L	1	PH1902	PUSHER		1	UE3301	EXHAUST CAP		1
▲ KM0514	HEX.SOC.HD.BOLT	M5×0.8－14L	2	PH2401	COMPRESSION SPRING		5	UG3501	PISTON STOP		1
▲ KM0516	HEX.SOC.HD.BOLT	M5×0.8－16L	1	PH2602	PUSHER PIN		2	YA0302	HEX BAR WRENCH	D3	1
KM0520	HEX.SOC.HD.BOLT	M5×0.8－20L	4	PH2801	PIVOT		1	YE2501	E-RING	ϕ2.5	2
OA003A	O-RING	ARP568-003	1	PH3101	CYLINDER CAP		1	YG0501	SPRING WASHER	ϕ5	4
OA004A	O-RING	ARP568-004	1	PH3301	COVER PLATE		1	YL0508	LOCK NUT	M5×0.8	1
OA126A	O-RING	ARP568-126	1	PH3401	LATCH		1				
OA204B	O-RING	ARP568-204	1	PH4701	MAGAZINE SEAT		1				
OB221A	O-RING	22×3	1	PH4801	MAGAZINE CAP		1				
OB271A	O-RING	26.8×2.4	1	PH4901	PUSHER SPRING		2				
OP010A	O-RING	P10	1	PH5001	MAGAZINE RETAINER		1				
OP012A	O-RING	P12	1	PH5101	COVER		1				
OP016H	O-RING	15.8×2.4	1	PN2201	SUPPORT		1				
OS030A	O-RING	S-30	1	PN2301	FIXED PLATE		5				
PA1901	PIN		1	UE0109	BODY		1			(PH/A1-03)	